GP8000E

GENERAC®

GP SERIES
Portable Generator

Features

- **COsense® Technology** - STOPS, ALERTS, SAVES. Powerful protection against hazardous carbon monoxide.
- **PowerRush™ Advanced Technology** delivers over 30% more starting capacity allowing you to do more with less.*
- **Electric start** for easy operation (battery included).
- **Generac's OHV engine** with splash lubrication provides a long engine life.
- **Low-oil level shutdown** automatically safeguards engine from damage.
- **Large-capacity steel fuel tank** with incorporated fuel gauge provides durability and up to a 15 hour run-time at 25% load (10 hour run-time at 50% load).
- **1 ¼" steel-tube cradle** for added durability and strength.
- **Hour Meter** tracks maintenance intervals.
- **Heavy-duty, never-flat wheels** allow for easy portability.
- **Fold-down locking handle** for sturdy portability and compact storage.
- **HomeLink™ Manual Transfer Switch compatible** designed to work with HomeLink™ manual transfer switches for safe home backup power.

*Increases electrical current upon demand; above rated output when starting electric motors.

Model 7686-3 / 7686-4 UPC: 696471074598 (49-State/CSA)
Model 7715-0 UPC: 696471086225 (49-State/CSA)

AC Rated Output Running Watts 8000
AC Maximum Output Starting Watts 10000

Control Panel

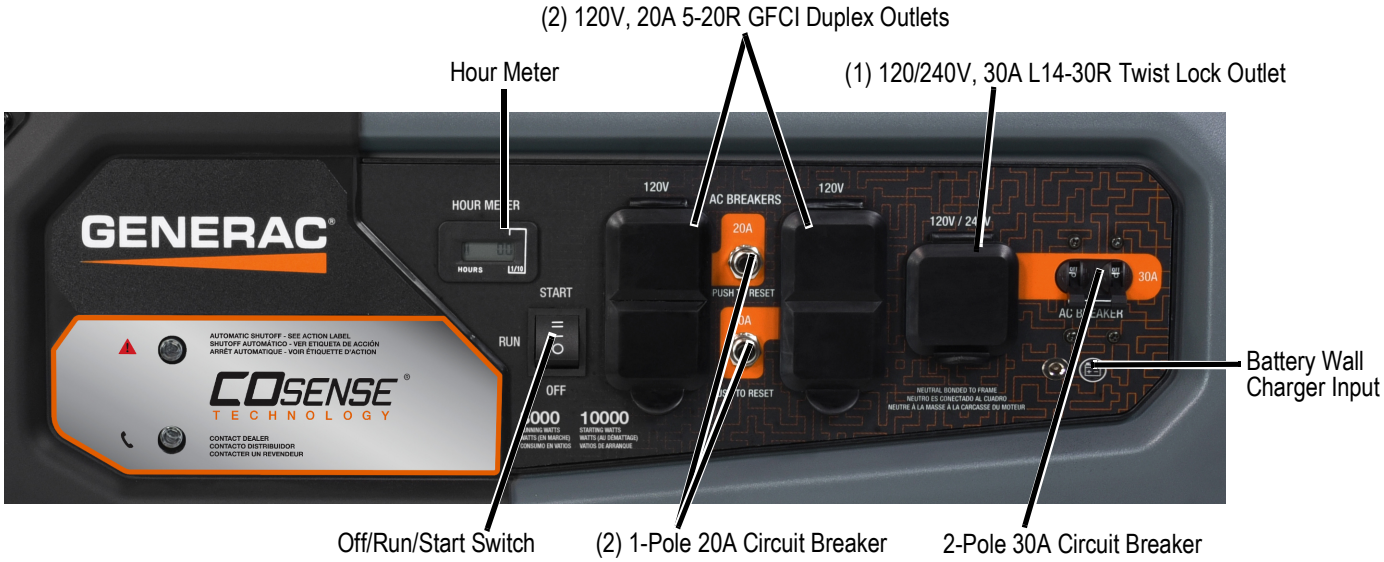

USA ENGINEERED

GENERAC®

GP8000E

Specifications

Product Series	GP8000E
Model Number	7686-3 / 7686-4 / 7715-0
Configuration	49 ST / CSA
AC Rated Output Running Watts	8000
AC Maximum Output Starting Watts	10000
Rated AC Voltage	120/240 VAC
Rated AC Frequency	60 Hz
Rated 120/240 VAC Amperage	66.6 / 33.3
Engine Displacement	420cc
Engine Type	OHV
Engine RPM	3600
Recommended Oil	10W-30 / SAE 30
Oil Capacity qt (L)	1.06 (1.0)
Lubrication Method	Splash
Automatic Voltage Regulation (AVR)	Yes
Choke Location	On Engine
Fuel Shut Off	On Fuel Tank
Starting Method	Electric Start / Recoil Pull Start
Battery Included	Yes

Battery Type	Lead Acid (12V DC, 9Ah)
Battery Part No.	0G9449
Battery Dimensions	5.94” x 2.56” x 3.70”
Battery Wall Charger Adapter	Included
Low Oil Shutdown	Yes
Neutral Bonded to Ground	Yes
Start Switch Type	Off / Run / Start
Start Switch Location	On Control Panel
Fuel Gauge	Yes
Fuel Tank Capacity gal (L)	7.9 (29.9)
Run Time at 25% of Rated Load (Hours)	15
Run Time at 50% of Rated Load (Hours)	10
Handle Style	Dual Grip, Single Folding with Lock Pin
Wheel Type	9.5” Never Flat
Warranty- Residential	3 Year Limited
Warranty- Commercial	1 Year Limited
Included	engine oil, handle & wheel kit, owner's manual

Dimensions and Weights

Length in (mm)	27.2 (692)
Width in (mm)	27 (684)
Ext. Length in (mm)	44.9 (1140.9)
Height in (mm)	26.5 (674)
Carton Length in (mm)	28.3 (720)
Carton Width in (mm)	21.7 (550)
Carton Height in (mm)	28 (710)
Unit Weight lbs (kg)	198 (90)
Shipping Weight lbs (kg)	214 (97)

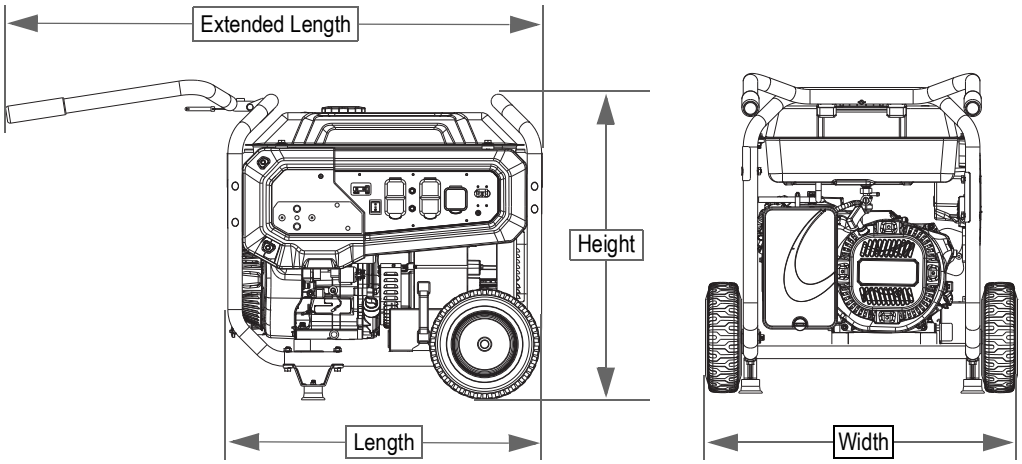

GENERAC®