GP6500

GENERAC®

GP SERIES
Portable Generator

Model 7690-2 UPC: 696471075816
(49-State)

Features

- **PowerRush™ Advanced Technology** delivers over 40% more starting capacity allowing you to do more with less.*
- **Generac's OHV engine** with splash lubrication provides a long engine life.
- **Low-oil level shutdown** automatically safeguards engine from damage.
- **Large-capacity steel fuel tank** with incorporated fuel gauge provides durability and up to a 10.5 hour run-time at 50% load.
- **1 ¼" steel-tube cradle** for added durability and strength.
- **Hour Meter** tracks maintenance intervals.
- **Heavy-duty, never-flat wheels** allow for easy portability.
- **Fold-down handle** for sturdy portability and compact storage.
- **HomeLink™** manual transfer switch compatible.

*Increases electrical current upon demand; above rated output when starting electric motors

AC Rated Output Running Watts 6500
AC Maximum Output Starting Watts 8125

Control Panel

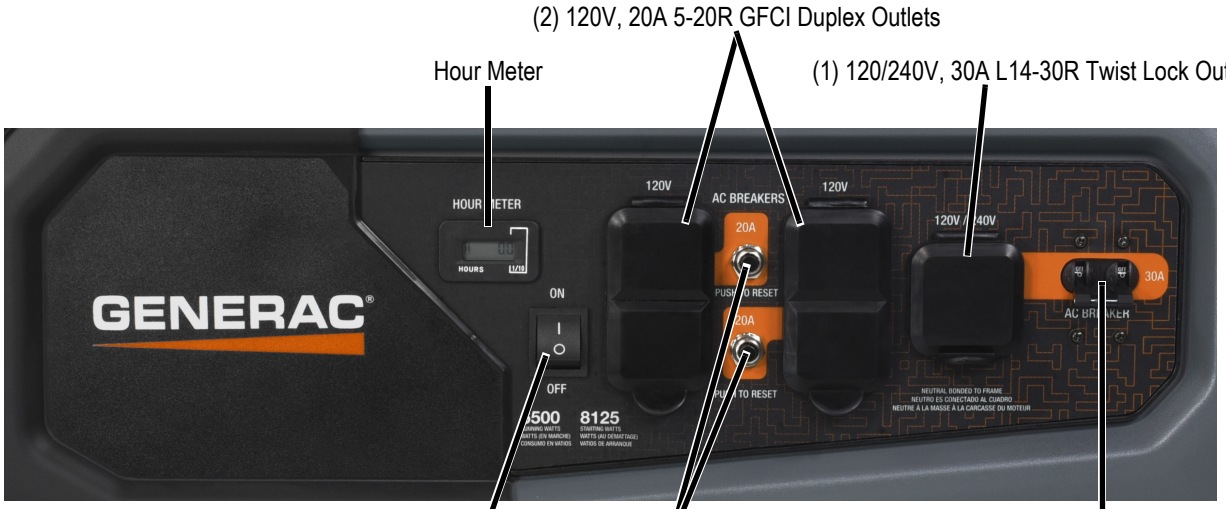

USA ENGINEERED

GENERAC®

GP6500

Specifications

Product Series	GP6500
Model Number	7690-2
Configuration	49ST
AC Rated Output Running Watts	6500
AC Maximum Output Starting Watts	8125
Rated AC Voltage	120/240 VAC
Rated AC Frequency	60 Hz
Rated 120/240 VAC Amperage	54.2 / 27.1
Engine Displacement	389cc
Engine Type	OHV
Engine RPM	3600
Recommended Oil	10W-30 / SAE 30
Oil Capacity qt (L)	1.06 (1.0)
Lubrication Method	Splash
Automatic Voltage Regulation (AVR)	Yes
Choke Location	On Engine
Fuel Shut Off	On Fuel Tank
Starting Method	Recoil Pull Start
Low Oil Shutdown	Yes

Neutral Bonded to Ground	Yes
Start Switch Type	On / Off
Start Switch Location	On Control Panel
Fuel Gauge	Yes
Fuel Tank Capacity gal (L)	6.9 (26)
Run Time at 50% of Rated Load (Hours)	10.5
Handle Style	Dual Grip, Single Folding with Lock Pin
Wheel Type	9.5" Never Flat
Warranty- Residential	3 Year Limited
Warranty- Commercial	1 Year Limited
Included	engine oil, oil funnel, handle & wheel kit, owner's manual

Dimensions and Weights

Length in (mm)	27.2 (692)
Width in (mm)	27 (684)
Ext. Length in (mm)	45.3 (1151)
Height in (mm)	26.5 (674)
Carton Length in (mm)	28.3 (720)
Carton Width in (mm)	21.7 (550)
Carton Height in (mm)	28 (710)
Unit Weight lbs (kg)	172 (78)
Shipping Weight lbs (kg)	190 (86.2)

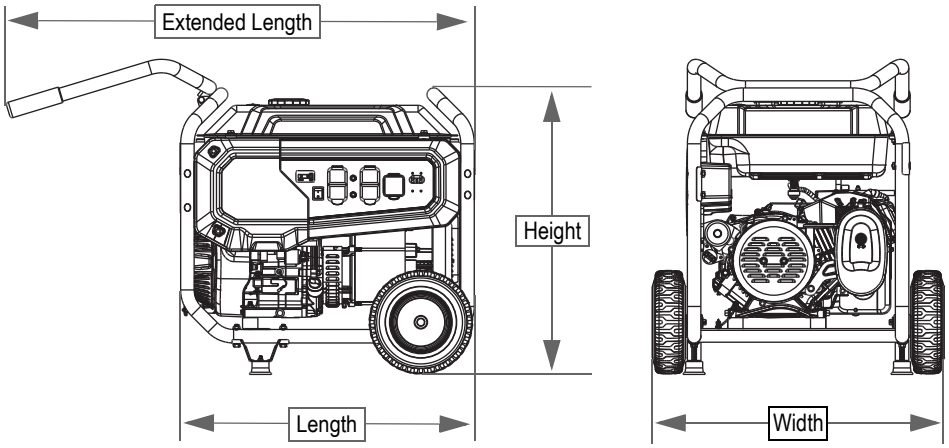

GENERAC®