GP3600

GP SERIES
Portable Generator

Model 7677-0 UPC: 696471074574 (49-State)
Model 7678-0 UPC: 696471074581 (50-State)

Features

- **PowerRush™ ADVANCED TECHNOLOGY** – Delivers over 40% more starting capacity allowing you to do more with less.*
- **Generac's OHV engine** with splash lubrication provides a long engine life.
- **Low oil level shutdown** automatically safeguards engine from damage.
- **Large capacity steel fuel tank** with incorporated fuel gauge provides durability and long run time.
- **1" steel tube cradle** for added durability and strength.
- **Heavy duty, never-flat wheels** allow for easy portability (wheel kit included).
- **Fold down handle** for sturdy portability and compact storage (handle included).

*Increases electrical current upon demand above rated output when starting electric motors

AC Rated Output Running Watts 3600
AC Maximum Output Starting Watts 4500

Control Panel

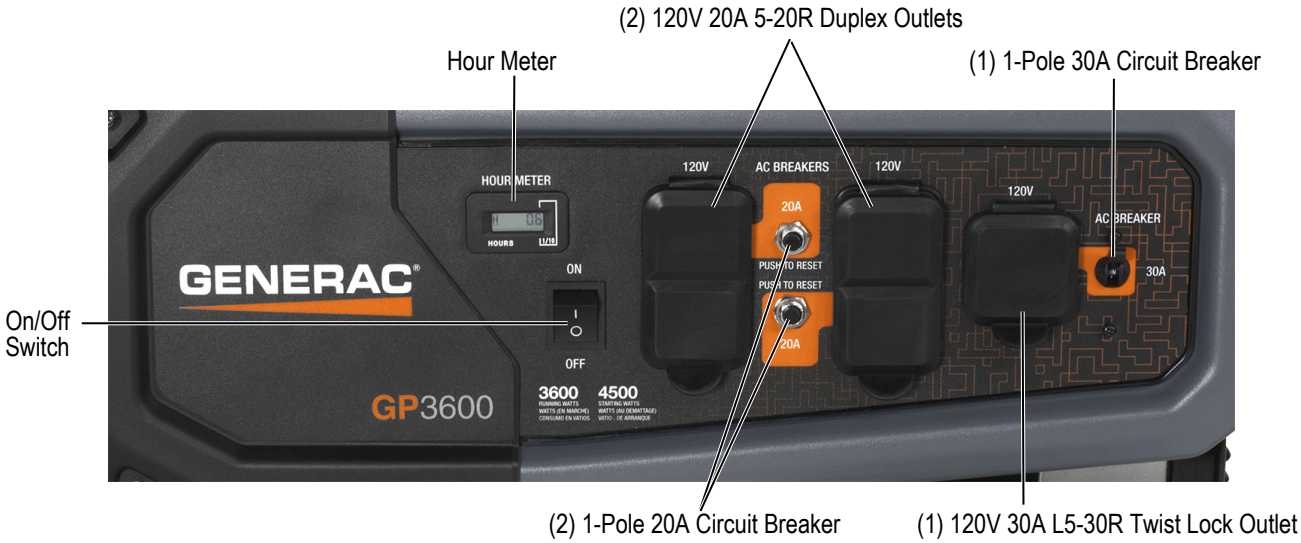

USA ENGINEERED

GENERAC®

GP3600

Specifications

Model (Configuration)	7677-0 (49 State) 7678-0 (50 State)
AC Rated Output Running Watts	3600
AC Maximum Output Starting Watts	4500
Rated AC Voltage	120 VAC
Rated AC Frequency	60 Hz
Rated 120 VAC Amperage	30A
Max 120 VAC Amperage	37.5
Engine Displacement	212cc
Engine Type	OHV
Engine RPM	3600
Recommended Oil	10W-30 / SAE 30
Oil Capacity qt (L)	0.63 (0.6)
Lubrication Method	Splash
Automatic Voltage Regulation (AVR)	Yes
Choke Location	On Engine
Fuel Shut Off	On Fuel Tank
Starting Method	Recoil Pull Start
Low Oil Shutdown	Yes

Neutral Bonded to Ground	No
Floating Neutral	Yes
Start Switch Type	On/Off
Start Switch Location	On Control Panel
Fuel Gauge	Yes
Fuel Tank Capacity gal (L)	3.7 (14)
Run Time at 50% (Hours)	9.3
Handle Style	Single Folding
Wheel Type	8" Never Flat
Warranty- Residential	3 Year Limited
Warranty- Commercial	1 Year Limited
Included	Engine oil, oil funnel, handle and wheel kit, and owner's manual

Dimensions and Weights

Length in (mm)	24 (610)
Width in (mm)	22.5 (570.5)
Height in (mm)	21.3 (541.5)
Extended Length in (mm)	36.5 (924)
Carton Length in (mm)	27.2 (690)
Carton Width in (mm)	17.9 (455)
Carton Height in (mm)	19.7 (500)
Unit Weight lbs (kg)	105 (47.6)
Shipping Weight lbs (kg)	112 (50.8)

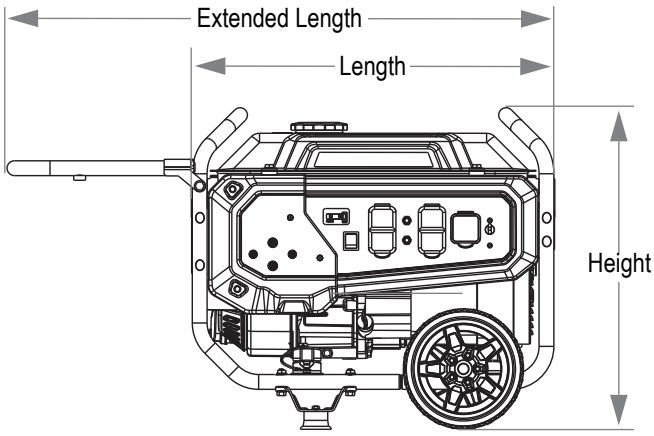

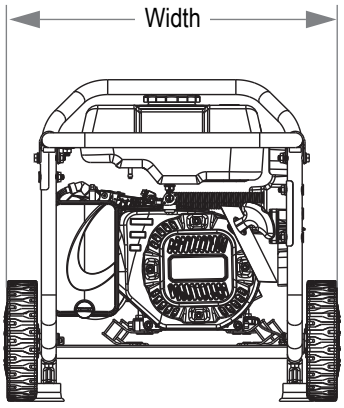

GENERAC®